CONCRETE SIDEWALK
(SEE JOINT PATTERN DETAIL SHEET C-101)

CONCRETE FLATWORK, 4 INCH THICK
(JOINTS TO HAVE NO ROUNDED EDGES)

HMA PG 64-34, 1/2 INCH MIX (6" THICK) (7-75-115 GYRATION)
UNTREATED BASE COURSE (PLAN QUANTITY) (6" THICK) (SEE NOTE 9)
GRANULAR BORROW (PLAN QUANTITY) (12" THICK) (SEE NOTE 10)
ROADWAY EXCAVATION (PLAN QUANTITY)

HMA PG 58-28, 1/2 INCH MIX (3" THICK) (7-75-115 GYRATION)
UNTREATED BASE COURSE (PLAN QUANTITY) (8" THICK)

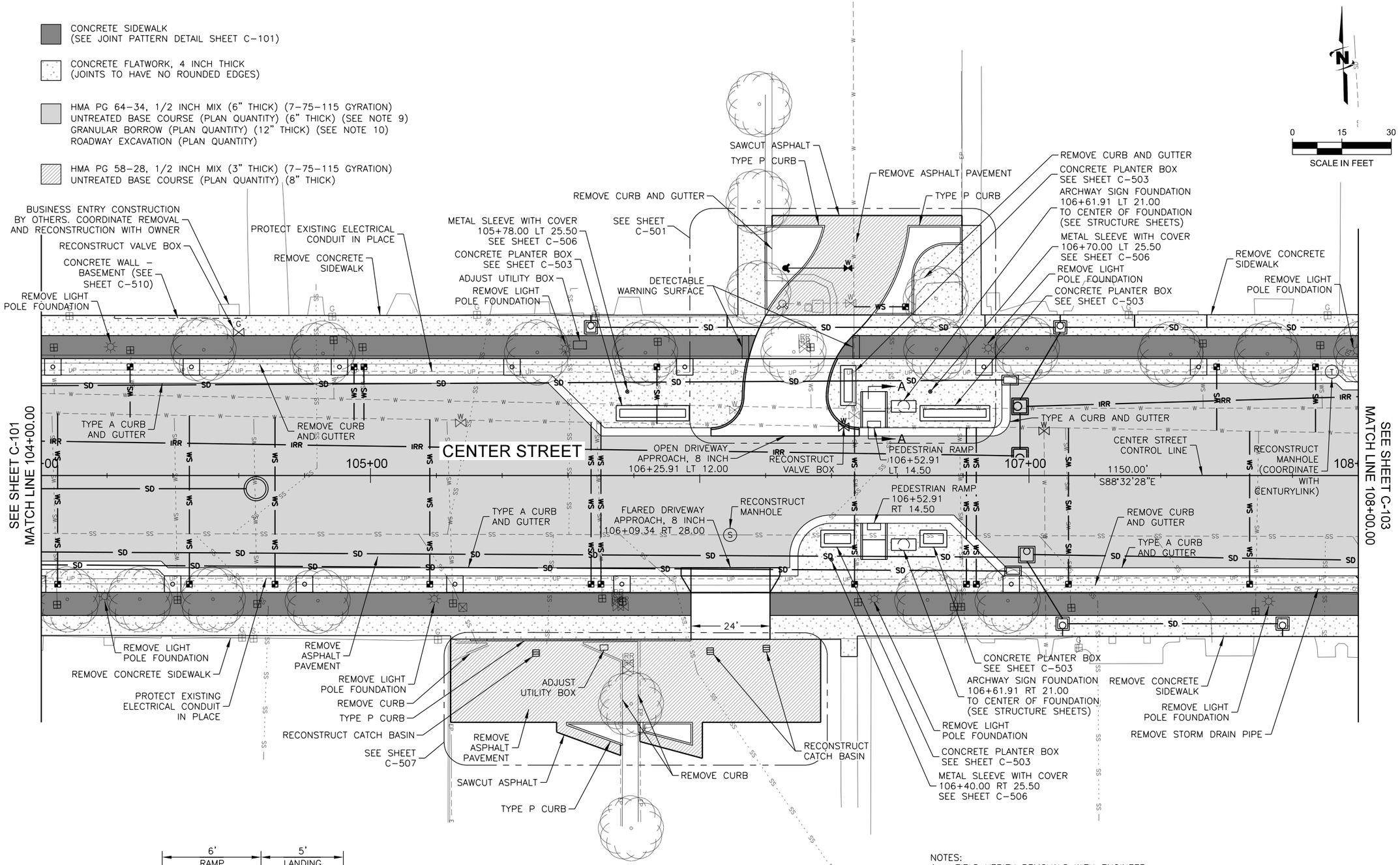

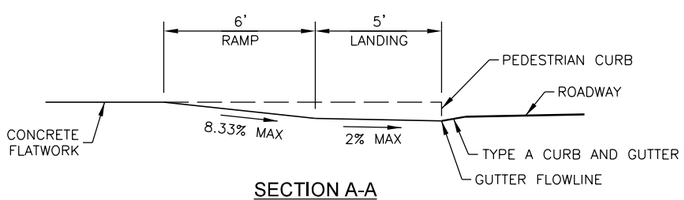

SECTION A-A
TYP

NOTES:
1. FIELD VERIFY REMOVALS WITH ENGINEER.
2. REMOVE ALL TREES WITHIN PROJECT LIMITS (18).
3. REMOVE 8 TO 10 INCH THICK CONCRETE PAVEMENT UNDERNEATH EXISTING ASPHALT. SEE SHEET C-301.
4. REMOVE EXISTING LIGHT POLE FOUNDATIONS AT LEAST 18 INCHES BELOW FINISHED GRADE.
5. SEE CG SHEETS FOR GRADING AND CURB, GUTTER, SIDEWALK, AND ASPHALT LIMITS.
6. SEE CU SHEETS FOR UTILITY WORK.
7. SEE L SHEETS FOR NEW LIGHT POLE LOCATIONS.
8. PROTECT EXISTING BUILDINGS, STRUCTURES AND UTILITIES FROM DAMAGE.
9. 3/4-INCH MINUS, WELL GRADED, A-1-a, MIN CBR 50.
10. 3-INCH MINUS, WELL GRADED, A-1-a, MIN CBR 70.

J-U-B ENGINEERS, INC.
J-U-B ENGINEERS, INC.
1047 South 100 West, Suite 180
Logan, UT 84321
Phone: 435.713.9514
Fax: 435.713.9503
www.jub.com

PROFESSIONAL ENGINEER
JONATHAN D. BUDGE
8203769-2202
STATE OF UTAH

REUSE OF DRAWINGS:
THIS DOCUMENT, AND THE IDEAS AND DESIGNS INCORPORATED HEREIN, AS AN INSTRUMENT OF PROFESSIONAL SERVICE, IS THE PROPERTY OF J-U-B ENGINEERS, Inc.AND IS NOT TO BE USED, IN WHOLE OR PART, FOR ANY OTHER PROJECT WITHOUT THE EXPRESS WRITTEN AUTHORIZATION OF J-U-B ENGINEERS, Inc.

NO.	DESCRIPTION	BY	APR.	DATE
	REVISION			

CENTER STREET, MAIN STREET TO 100 WEST
LOGAN CITY

ROADWAY

FILE: 57-18-035_C-102
JUB PROJ. #:57-18-035
DRAWN BY: JBW
DESIGN BY: JDB
CHECKED BY: JCP
ONE INCH
AT FULL SIZE, IF NOT ONE INCH, SCALE ACCORDINGLY
LAST UPDATED: 6/20/2019

SHEET NUMBER:
C-102

Plot Date:-- Plotted By:Samuel Powell
Date Created:11/10/2019 \\LOGAN\PUBLIC\PROJECTS\JUB\LOGAN\57-18-035_LOGAN_CENTER_STREET\CAD\SHEET\CIVIL\57-18-035_C-102.DGN

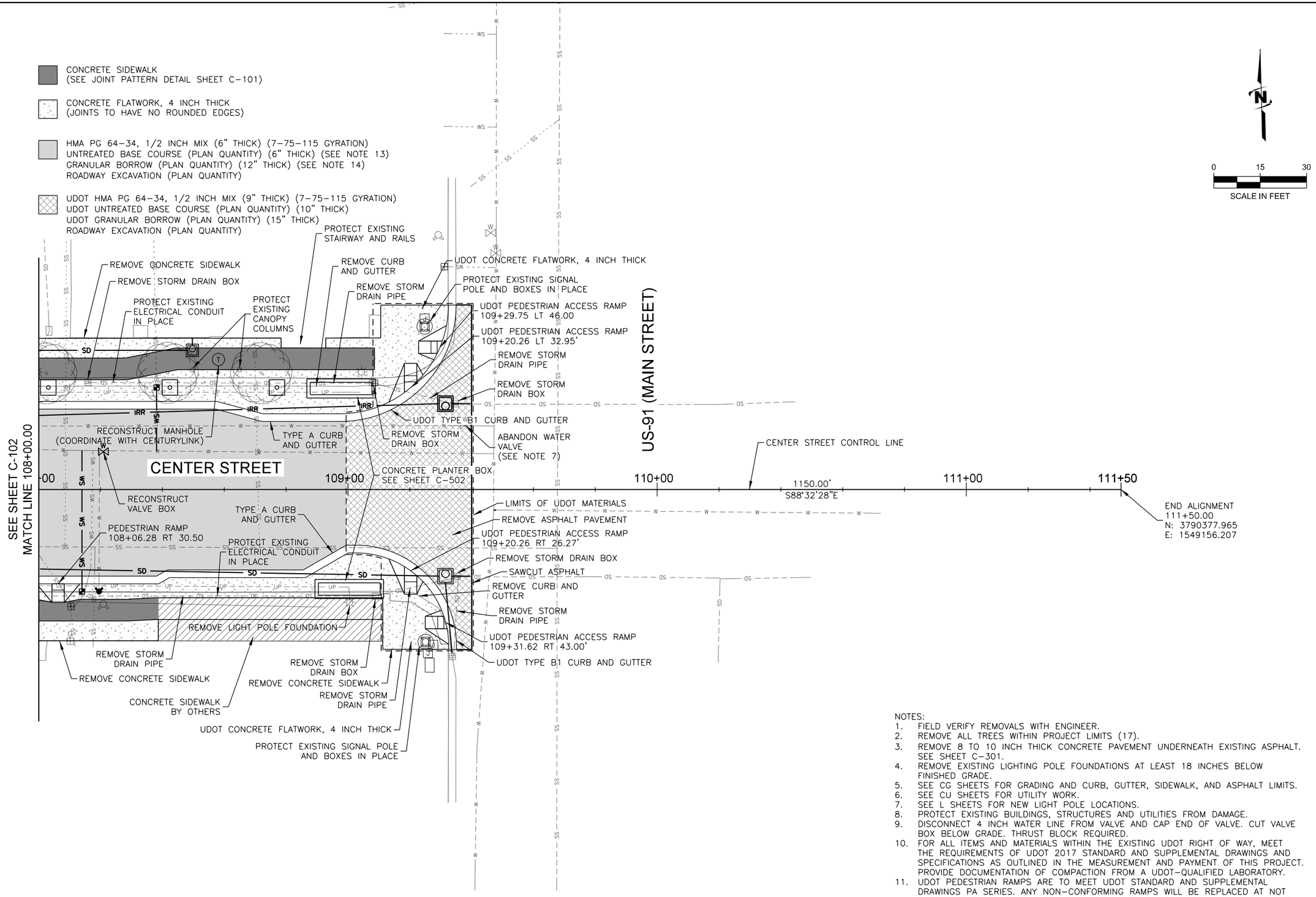

NOTES:

1. FIELD VERIFY REMOVALS WITH ENGINEER.
2. REMOVE ALL TREES WITHIN PROJECT LIMITS (17).
3. REMOVE 8 TO 10 INCH THICK CONCRETE PAVEMENT UNDERNEATH EXISTING ASPHALT. SEE SHEET C-301.
4. REMOVE EXISTING LIGHTING POLE FOUNDATIONS AT LEAST 18 INCHES BELOW FINISHED GRADE.
5. SEE CG SHEETS FOR GRADING AND CURB, GUTTER, SIDEWALK, AND ASPHALT LIMITS.
6. SEE CU SHEETS FOR UTILITY WORK.
7. SEE L SHEETS FOR NEW LIGHT POLE LOCATIONS.
8. PROTECT EXISTING BUILDINGS, STRUCTURES AND UTILITIES FROM DAMAGE.
9. DISCONNECT 4 INCH WATER LINE FROM VALVE AND CAP END OF VALVE. CUT VALVE BOX BELOW GRADE. THRUST BLOCK REQUIRED.
10. FOR ALL ITEMS AND MATERIALS WITHIN THE EXISTING UDOT RIGHT OF WAY, MEET THE REQUIREMENTS OF UDOT 2017 STANDARD AND SUPPLEMENTAL DRAWINGS AND SPECIFICATIONS AS OUTLINED IN THE MEASUREMENT AND PAYMENT OF THIS PROJECT. PROVIDE DOCUMENTATION OF COMPACTION FROM A UDOT-QUALIFIED LABORATORY.
11. UDOT PEDESTRIAN RAMPS ARE TO MEET UDOT STANDARD AND SUPPLEMENTAL DRAWINGS PA SERIES. ANY NON-CONFORMING RAMPS WILL BE REPLACED AT NOT COST TO THE DEPARTMENT OR LOGAN CITY. PERMIT INSPECTORS WILL SUBMIT THE REQUIRED FORMS FOR ALL IMPACTED UDOT RAMPS.
12. FOR ALL CONCRETE SIDEWALK, CURB, AND GUTTER REMOVAL ITEMS WITHIN UDOT'S EXISTING RIGHT OF WAY, REMOVE TO THE NEAREST EXISTING JOINT.
13. 3/4-INCH MINUS, WELL GRADED, A-1-a, MIN CBR 50.
14. 3-INCH MINUS, WELL GRADED, A-1-a, MIN CBR 70.

J-U-B ENGINEERS, INC.

J-U-B ENGINEERS, INC.
1047 South 100 West,
Suite 180
Logan, UT 84321
Phone: 435.713.9514
Fax: 435.713.9503
www.jub.com

PROFESSIONAL ENGINEER
REGISTERED
JONATHAN D. BUDGE
8203769-2202
STATE OF UTAH

REUSE OF DRAWINGS
THIS DOCUMENT, AND THE IDEAS AND DESIGNS INCORPORATED HEREIN, AS AN INSTRUMENT OF PROFESSIONAL SERVICE, IS THE PROPERTY OF J-U-B ENGINEERS, Inc. AND IS NOT TO BE USED, IN WHOLE OR PART, FOR ANY OTHER PROJECT WITHOUT THE EXPRESS WRITTEN AUTHORIZATION OF J-U-B ENGINEERS, Inc.

NO.	DESCRIPTION	BY	APR.	DATE

REVISION

CENTER STREET, MAIN STREET TO 100 WEST
LOGAN CITY

ROADWAY

FILE: 57-18-035_C-103
JUB PROJ. #: 57-18-035
DRAWN BY: JBW
DESIGN BY: JDB
CHECKED BY: JCP

ONE INCH
AT FULL SIZE, IF NOT ONE INCH, SCALE ACCORDINGLY

LAST UPDATED: 6/21/2019

SHEET NUMBER:
C-103

Plot Date: Plotted By:
Date Created:11/10/2019 \\LOGANPUBLIC\PROJECTS\JUB\LOGAN\57-18-035_LOGAN_CENTER_STREET\CAD\SHEET\CIVIL\57-18-035_C-103.DGN

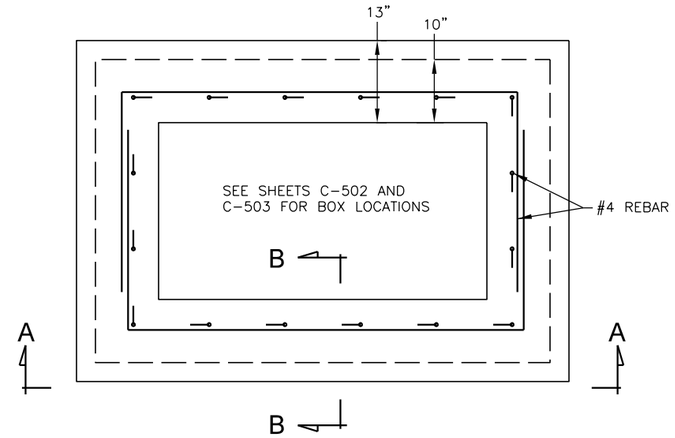

PLANTER BOX

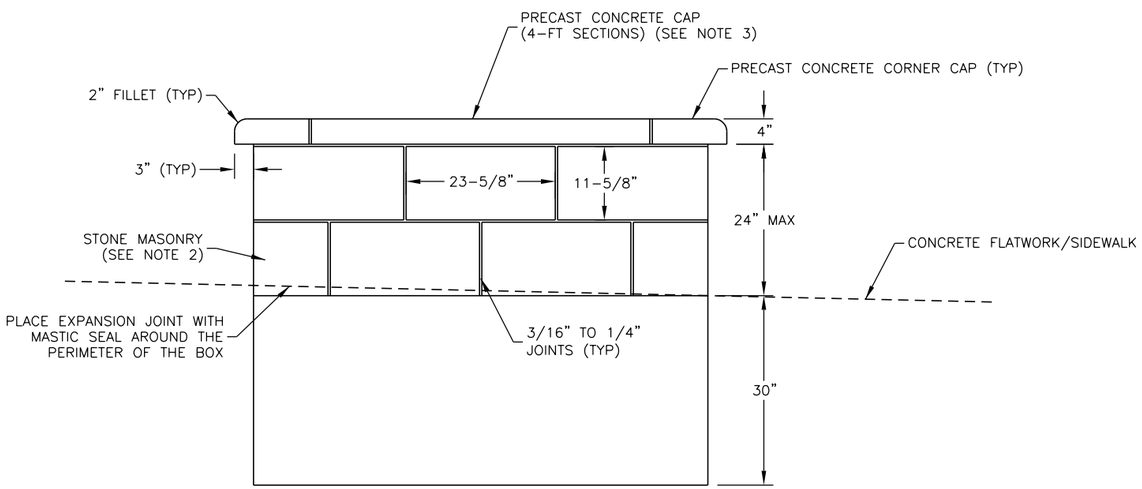

SECTION A-A

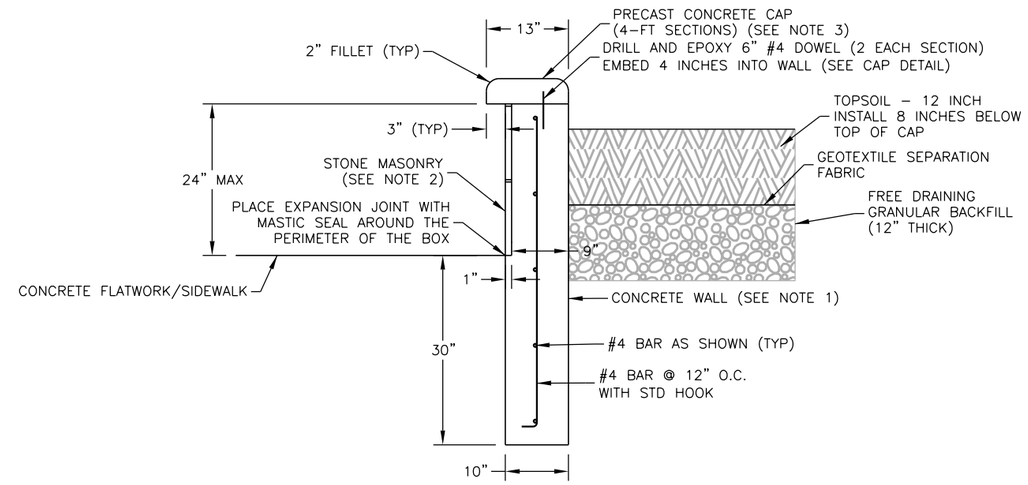

SECTION B-B

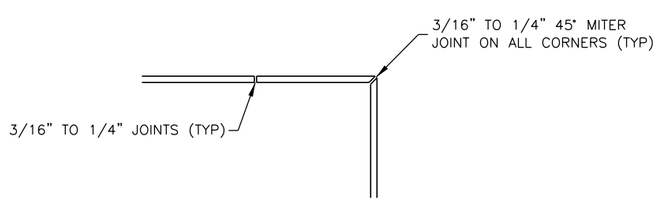

JOINT DETAIL

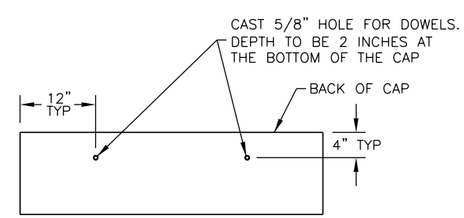

CAP DETAIL

NOTES:

1. APPLY WATERPROOF SEALANT TO THE INTERIOR WALL OF THE PLANTER BOX.
2. USE GREY CLIFF 1 STONE. CONTACT ALAN HAWS WITH LKL ASSOCIATES, INC. AT 801-695-5542 OR AT AHAWS@LKLASSOC.COM FOR DETAILS. USE MAPEI GRANIRAPID MORTAR FOR INSTALLATION. USE MAPEI ULTRA COLOR PLUS FA FOR GROUTING JOINTS. MATCH COLOR OF THE STONE. INSTALL STONE PER MANUFACTURER'S RECOMMENDATION. MINIMUM LENGTH TO BE NO LESS THAN 6 INCHES. ACID WASH CONCRETE WALL BEFORE INSTALLING STONE.
3. PRECAST CONCRETE CAP TO BE A STANDARD CONCRETE GRAY COLOR. INSTALL CAP WITH MAPEI GRANIRAPID MORTAR. INSTALL PER SECTION B-B AND PER MANUFACTURER'S RECOMMENDATION. MINIMUM CAP LENGTH TO BE NO LESS THAN 12 INCHES. ACID WASH CONCRETE WALL BEFORE INSTALLING CAP.
4. CONTRACTOR TO SUBMIT DETAILED DRAWINGS AND PRODUCT SPECIFICATIONS OF THE WALL, AND LAYOUT OF THE STONE, CONCRETE CAPS, AND ALL ACCESSORIES FOR ENGINEER'S APPROVAL PRIOR TO INSTALLATION.
5. SEE ELECTRICAL SHEETS FOR ELECTRICAL OUTLET INSTALLATION DETAIL.

J-U-B ENGINEERS, INC.

J-U-B ENGINEERS, INC.
1047 South 100 West,
Suite 180
Logan, UT 84321
Phone: 435.713.9514
Fax: 435.713.9503
www.jub.com

PROFESSIONAL ENGINEER
REGISTERED
JONATHAN D.
BUDGE
8203769-2202
STATE OF UTAH

REUSE OF DRAWINGS:
THIS DOCUMENT, AND THE IDEAS AND DESIGNS INCORPORATED HEREIN, AS AN INSTRUMENT OF PROFESSIONAL SERVICE, IS THE PROPERTY OF J-U-B ENGINEERS, Inc.AND IS NOT TO BE USED, IN WHOLE OR PART, FOR ANY OTHER PROJECT WITHOUT THE EXPRESS WRITTEN AUTHORIZATION OF J-U-B ENGINEERS, Inc.

NO.	DESCRIPTION	BY	APR.	DATE

REVISION

CENTER STREET, MAIN STREET TO 100 WEST
LOGAN CITY

DETAILS

FILE: 57-18-035_C-505
JUB PROJ. #:57-18-035
DRAWN BY: JBW
DESIGN BY: JDB
CHECKED BY: JCP
ONE INCH
AT FULL SIZE, IF NOT ONE INCH, SCALE ACCORDINGLY
LAST UPDATED: 6/24/2019

SHEET NUMBER:
C-505

Plot Date:--- Plotted By:Samuel Powell
Date Created:12/19/2018\\LOGAN\PUBLIC\PROJECTS\JUB\LOGAN\57-18-035_LOGAN_CENTER_STREET\CAD\SHEET\CIVIL\57-18-035_C-505.DGN

REMOVE WATER SERVICE	
STATION	OFFSET
104+03.83	38.87 LT
104+04.84	39.27 RT
104+27.04	38.04 LT
104+41.40	37.81 RT
104+65.62	39.03 RT
104+88.90	41.22 LT
104+97.60	38.96 LT
105+25.04	38.87 RT
105+70.38	37.38 RT
105+76.53	38.31 RT
105+87.23	40.62 LT
106+33.65	38.93 LT
106+48.07	38.54 RT
106+77.17	39.91 RT
106+79.40	39.92 RT
107+12.87	40.22 RT
107+52.79	40.08 LT
107+68.77	41.31 RT
107+88.47	39.55 LT

WATER SERVICE, 1 INCH (SEE NOTE 5)	
STATION	OFFSET
104+05.00	33.00 RT
104+27.00	33.00 LT
104+45.00	33.00 RT
104+71.00	33.00 RT
104+95.00	33.00 LT
104+98.00	33.00 LT
105+18.00	33.00 RT
105+67.00	33.00 RT
105+70.00	33.00 RT
105+87.00	33.00 LT
106+23.00	60.00 LT
106+47.00	33.00 RT
106+81.00	33.00 RT
106+84.00	33.00 RT
107+12.00	33.00 RT
107+57.00	33.00 LT
107+67.00	33.00 RT
107+87.00	33.00 LT

PIPE			
ID	SIZE	LENGTH	TYPE
IP1-2	18 INCH	399'	RCP
IP2-1	18 INCH	231'	RCP
IP2-2	18 INCH	11'	RCP
P1-2	36 INCH	95'	PERFORATED SEE SHEET C-504
P1-4	18 INCH	342'	RCP
P1-6	18 INCH	315'	RCP
P1-9	18 INCH	367'	RCP
P2-1	18 INCH	140	HDPE
P2-2	18 INCH	24'	HDPE
P2-3	18 INCH	138'	HDPE
P2-4	18 INCH	21	HDPE
P2-5	18 INCH	64'	HDPE
P2-6	18 INCH	228'	RCP

DRAINAGE BOX		
ID	SIZE	TYPE
MH2-1	6'	MANHOLE
SD2-1	4' X 2'	CATCH BASIN
SD2-2	4' X 2'	CATCH BASIN
SD2-3	3' X 3'	CLEANOUT
SD2-4	3' X 3'	CLEANOUT
SD2-5	3' X 3'	CLEANOUT
SD2-6	3' X 3'	CLEANOUT
CB2-1	4' X 4'	CLEANOUT
CB2-2	4' X 4'	CLEANOUT
CB2-3	4' X 4'	CLEANOUT

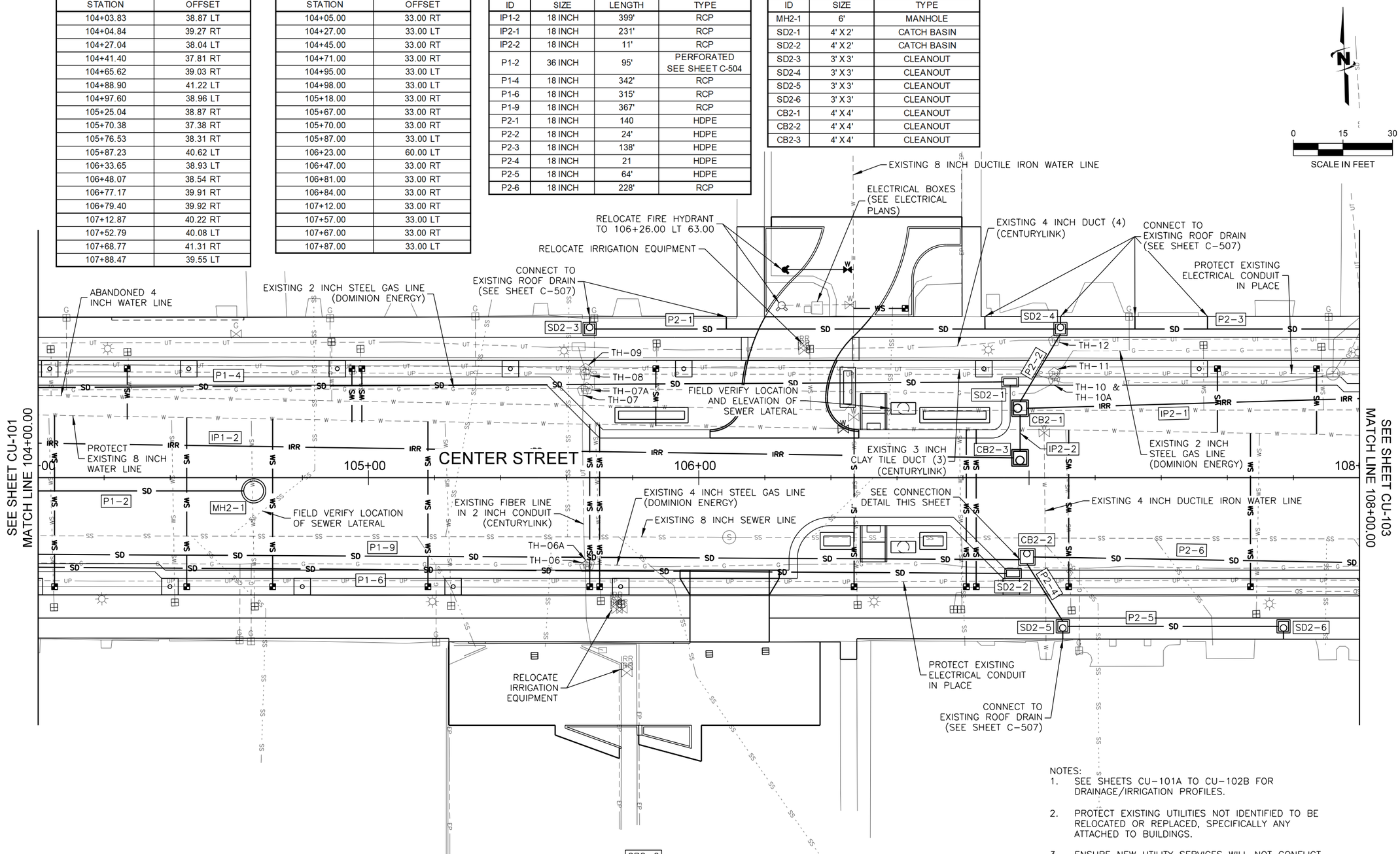

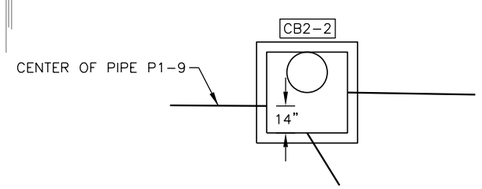

P1-9 TO CB2-2 CONNECTION

NOTES:

1. SEE SHEETS CU-101A TO CU-102B FOR DRAINAGE/IRRIGATION PROFILES.
2. PROTECT EXISTING UTILITIES NOT IDENTIFIED TO BE RELOCATED OR REPLACED, SPECIFICALLY ANY ATTACHED TO BUILDINGS.
3. ENSURE NEW UTILITY SERVICES WILL NOT CONFLICT WITH NEW PIPING.
4. SEE SHEET CU-001 FOR UTILITY TEST HOLE DATA.
5. CONTRACTOR TO SUPPLY:
   SETTER – 70 SERIES COPPERSETTER, 15 INCH SETTER, NO. VBHC74-15W-44-44-Q-NL.
   LOGAN CITY TO SUPPLY:
   LID – D&L SUPPLY A-1180-71
   FRAME – (4" RISER) – D&L SUPPLY G-2093-R1I.
6. PIPE ZONE BEDDING MATERIAL TO BE WELL GRADED, 3/4-INCH MINUS, UNTREATED BASE COURSE.

J-U-B ENGINEERS, INC.

J-U-B ENGINEERS, INC.
1047 South 100 West,
Suite 180
Logan, UT 84321
Phone: 435.713.9514
Fax: 435.713.9503
www.jub.com

PROFESSIONAL ENGINEER
JONATHAN D. BUDGE
8203769-2202
STATE OF UTAH

REUSE OF DRAWINGS:
THIS DOCUMENT, AND THE IDEAS AND DESIGNS INCORPORATED HEREIN, AS AN INSTRUMENT OF PROFESSIONAL SERVICE, IS THE PROPERTY OF **J-U-B ENGINEERS, Inc.** AND IS NOT TO BE USED, IN WHOLE OR PART, FOR ANY OTHER PROJECT WITHOUT THE EXPRESS WRITTEN AUTHORIZATION OF **J-U-B ENGINEERS, Inc.**

NO.	DESCRIPTION	BY	APR.	DATE
	REVISION			

CENTER STREET, MAIN STREET TO 100 WEST LOGAN CITY

UTILITIES

FILE: 57-18-035_CU-102
JUB PROJ. #: 57-18-035
DRAWN BY: JBW
DESIGN BY: JDB
CHECKED BY: JCP
ONE INCH
AT FULL SIZE, IF NOT ONE INCH, SCALE ACCORDINGLY
LAST UPDATED: 6/3/2019

SHEET NUMBER:
CU-102

Plot Date:— Plotted By:Samuel Powell
Date Created:11/10/2019 \\LOGAN\PUBLIC\PROJECTS\JUBU\LOGAN\57-18-035_LOGAN_CENTER_STREET\CAD\SHEET\CIVIL\57-18-035_CU-102.DGN

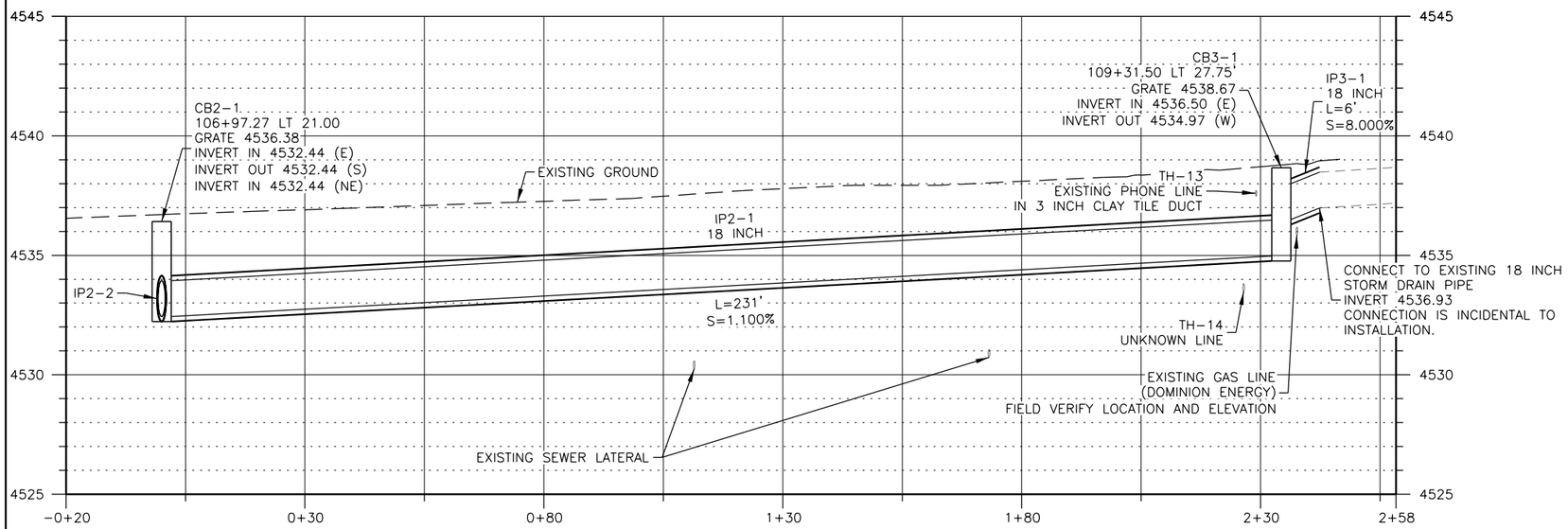

CB 2-1 TO IP 3-1

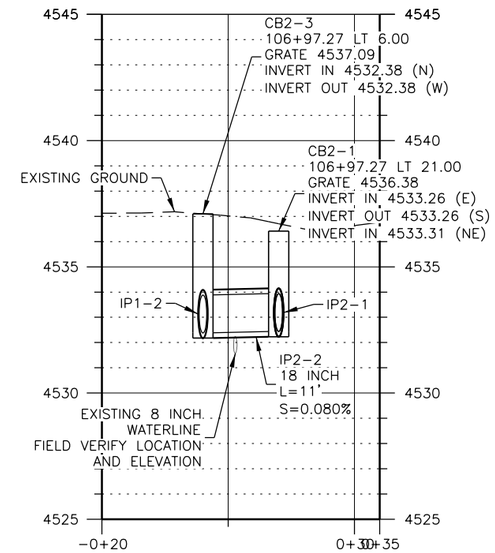

CB 2-3 TO CB 2-1

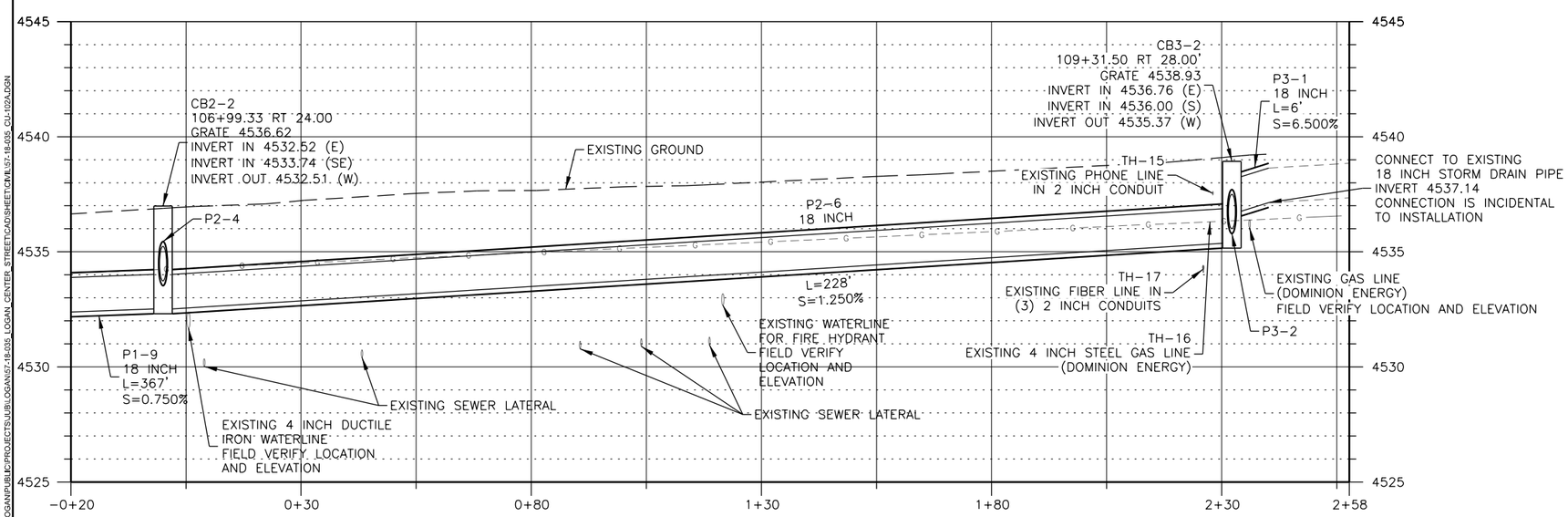

CB 2-2 TO P 3-1

NOTES:
1. ALL UTILITIES SHOWN ARE APPROXIMATE LOCATIONS UNLESS OTHERWISE NOTED. SEE SHEET CU-001 FOR UTILITY TEST HOLE DATA. CONTRACTOR TO VERIFY ALL UTILITIES.
2. WATER SERVICES ARE NOT SHOWN.

J-U-B ENGINEERS, INC.

J-U-B ENGINEERS, INC.
1047 South 100 West,
Suite 180
Logan, UT 84321
Phone: 435.713.9514
Fax: 435.713.9503
www.jub.com

PROFESSIONAL ENGINEER
REGISTERED
SEAL
JONATHAN D.
BUDGE
8203769-2202
STATE OF UTAH

REUSE OF DRAWINGS:
THIS DOCUMENT, AND THE IDEAS AND DESIGNS INCORPORATED HEREIN, AS AN INSTRUMENT OF PROFESSIONAL SERVICE, IS THE PROPERTY OF **J-U-B ENGINEERS, Inc.** AND IS NOT TO BE USED, IN WHOLE OR PART, FOR ANY OTHER PROJECT WITHOUT THE EXPRESS WRITTEN AUTHORIZATION OF **J-U-B ENGINEERS, Inc.**

NO.	DESCRIPTION	BY	APR.	DATE
	REVISION			

CENTER STREET, MAIN STREET TO 100 WEST
LOGAN CITY

UTILITY PROFILES

FILE: 57-18-035_CU-102A
JUB PROJ. #:57-18-035
DRAWN BY: JBW
DESIGN BY: JDB
CHECKED BY: JCP
ONE INCH
AT FULL SIZE, IF NOT ONE INCH, SCALE ACCORDINGLY
LAST UPDATED: 6/3/2019

SHEET NUMBER:
CU-102A

Plot Date:--- Plotted By:Samuel Powell
Date Created:11/10/2019 \\LOGANPUBLIC\PROJECTS\JUB\LOGAN\57-18-035_LOGAN_CENTER_STREET\CAD\SHEET\CIVIL\57-18-035_CU-102A.DGN

PIPE			
ID	SIZE	LENGTH	TYPE
IP2-1	18 INCH	231'	RCP
IP3-1	18 INCH	6'	RCP
P2-3	18 INCH	24'	HDPE
P2-6	18 INCH	228'	RCP
P3-1	18 INCH	6'	RCP
P3-2	18 INCH	23'	RCP

DRAINAGE BOX		
ID	SIZE	TYPE
CB3-1	4' X 4'	CLEANOUT (UDOT)
CB3-2	4' X 4'	CLEANOUT (UDOT)
SD3-1	3' X 3'	CLEANOUT

REMOVE WATER SERVICE	
STATION	OFFSET
108+10.46	37.85 RT

WATER SERVICE, 1 INCH (SEE NOTE 5)	
STATION	OFFSET
108+14.00	33.00 RT
108+38.00	33.00 LT

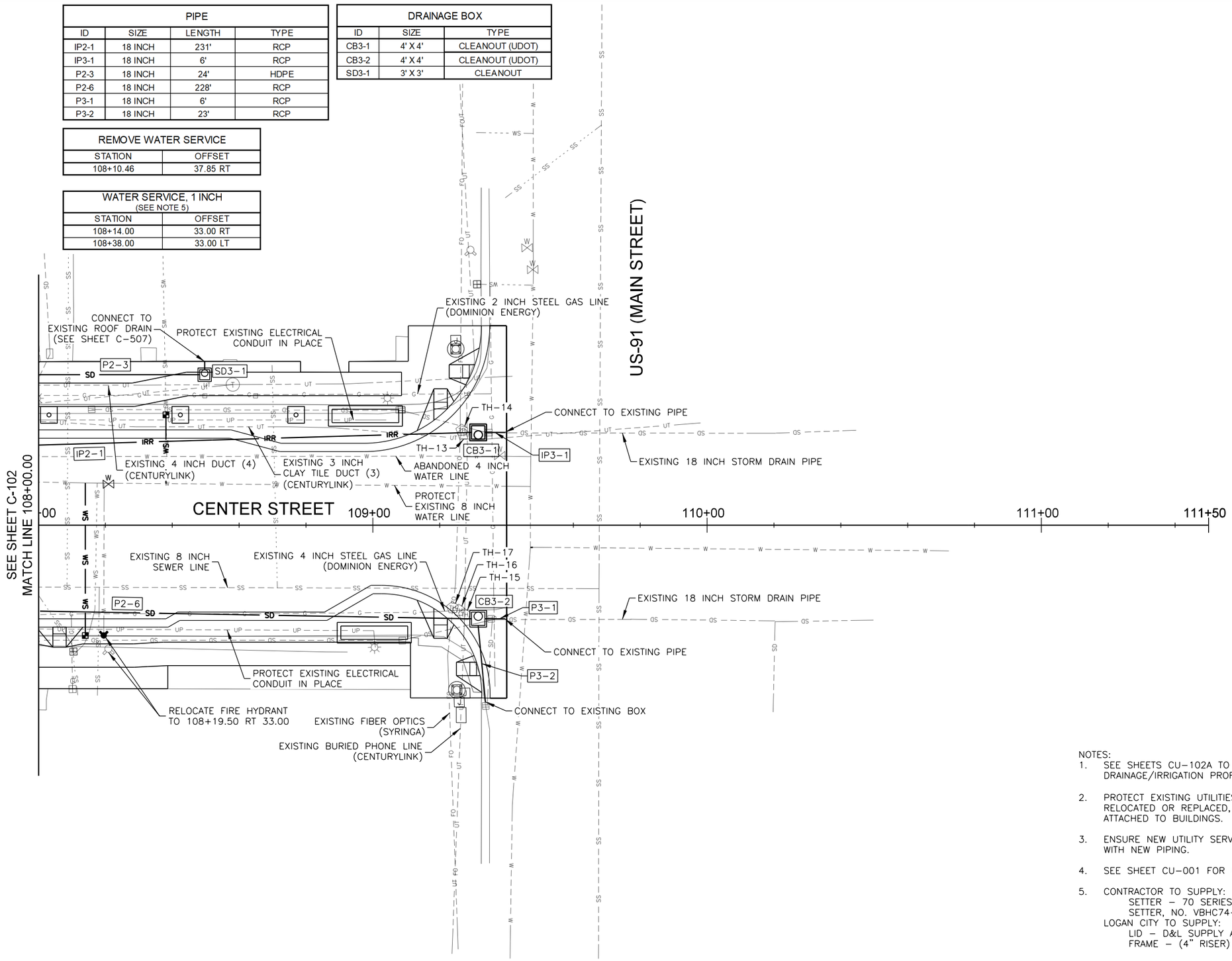

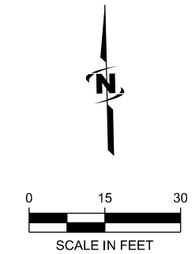

NOTES:

1. SEE SHEETS CU-102A TO CU-102B FOR DRAINAGE/IRRIGATION PROFILES.
2. PROTECT EXISTING UTILITIES NOT IDENTIFIED TO BE RELOCATED OR REPLACED, SPECIFICALLY ANY ATTACHED TO BUILDINGS.
3. ENSURE NEW UTILITY SERVICES WILL NOT CONFLICT WITH NEW PIPING.
4. SEE SHEET CU-001 FOR UTILITY TEST HOLE DATA.
5. CONTRACTOR TO SUPPLY:
   SETTER – 70 SERIES COPPERSETTER, 15 INCH SETTER, NO. VBHC74-15W-44-44-Q-NL.
   LOGAN CITY TO SUPPLY:
   LID – D&L SUPPLY A-1180-71
   FRAME – (4" RISER) – D&L SUPPLY G-2093-R1I.
6. COORDINATE SCHEDULE AND INSTALLATION OF THE WATER METER LOCATED AT 108+38.00 LT 33.00 WITH PAUL DAVIS AT 435-752-3600. HE WILL BE CHANGING OUT THE SERVICE LINE FROM THE METER TO THE BUILDING.
7. PIPE ZONE BEDDING MATERIAL TO BE WELL GRADED, 3/4-INCH MINUS, UNTREATED BASE COURSE.

J-U-B ENGINEERS, INC.

J-U-B ENGINEERS, INC.
1047 South 100 West,
Suite 180
Logan, UT 84321
Phone: 435.713.9514
Fax: 435.713.9503
www.jub.com

PROFESSIONAL ENGINEER
LICENSED SEAL
JONATHAN D. BUDGE
8203769-2202
STATE OF UTAH

REUSE OF DRAWINGS
THIS DOCUMENT, AND THE IDEAS AND DESIGNS INCORPORATED HEREIN, AS AN INSTRUMENT OF PROFESSIONAL SERVICE, IS THE PROPERTY OF J-U-B ENGINEERS, Inc. AND IS NOT TO BE USED, IN WHOLE OR PART, FOR ANY OTHER PROJECT WITHOUT THE EXPRESS WRITTEN AUTHORIZATION OF J-U-B ENGINEERS, Inc.

NO.	DESCRIPTION	BY	APR.	DATE

REVISION

CENTER STREET, MAIN STREET TO 100 WEST
LOGAN CITY

UTILITIES

FILE: 57-18-035_CU-103
JUB PROJ. #:57-18-035
DRAWN BY: JBW
DESIGN BY: JDB
CHECKED BY: JCP
ONE INCH
AT FULL SIZE, IF NOT ONE INCH, SCALE ACCORDINGLY
LAST UPDATED: 6/24/2019

SHEET NUMBER:
CU-103

Plot Date:— Plotted By:Samuel Powell
Date Created:11/10/2019 \\LOGANP\PUBLIC\PROJECTS\JUB\LOGAN\57-18-035_LOGAN_CENTER_STREET\CAD\SHEET\CIVIL\57-18-035_CU-103.DGN

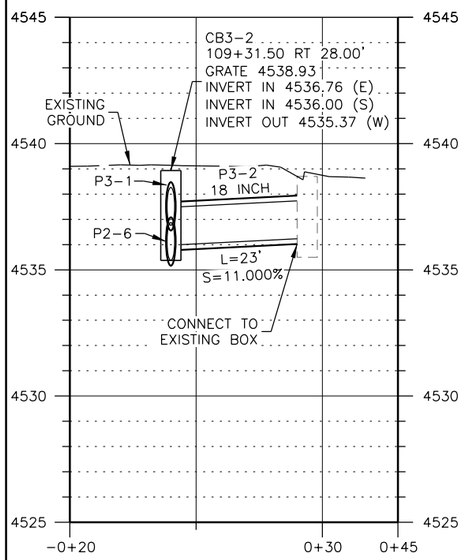

CB 3-2 TO P3-2

NOTES:
1. ALL UTILITIES SHOWN ARE APPROXIMATE LOCATIONS UNLESS OTHERWISE NOTED. SEE SHEET CU-001 FOR UTILITY TEST HOLE DATA. CONTRACTOR TO VERIFY ALL UTILITIES.
2. WATER SERVICES ARE NOT SHOWN.

J-U-B ENGINEERS, INC.

J-U-B ENGINEERS, INC.
1047 South 100 West,
Suite 180
Logan, UT 84321
Phone: 435.713.9514
Fax: 435.713.9503
www.jub.com

PROFESSIONAL ENGINEER
REGISTERED
JONATHAN D. BUDGE
8203769-2202
STATE OF UTAH

REUSE OF DRAWINGS
THIS DOCUMENT, AND THE IDEAS AND DESIGNS INCORPORATED HEREIN, AS AN INSTRUMENT OF PROFESSIONAL SERVICE, IS THE PROPERTY OF **J-U-B ENGINEERS, Inc.** AND IS NOT TO BE USED, IN WHOLE OR PART, FOR ANY OTHER PROJECT WITHOUT THE EXPRESS WRITTEN AUTHORIZATION OF **J-U-B ENGINEERS, Inc.**

NO.	DESCRIPTION	BY	APR.	DATE

REVISION

CENTER STREET, MAIN STREET TO 100 WEST
LOGAN CITY

UTILITY PROFILES

FILE: 57-18-035_CU-103A
JUB PROJ. #:57-18-035
DRAWN BY: JBW
DESIGN BY: JDB
CHECKED BY: JCP
ONE INCH
AT FULL SIZE, IF NOT ONE INCH, SCALE ACCORDINGLY
LAST UPDATED: 6/24/2019

SHEET NUMBER:
CU-103A

Plot Date:--- Plotted By:Samuel Powell
Date Created:11/0/2019 \\LOGANPUBLIC\PROJECTS\JUB\LOGAN\57-18-035_LOGAN_CENTER_STREET\CAD\SHEET\CIVIL\57-18-035_CU-103A.DGN